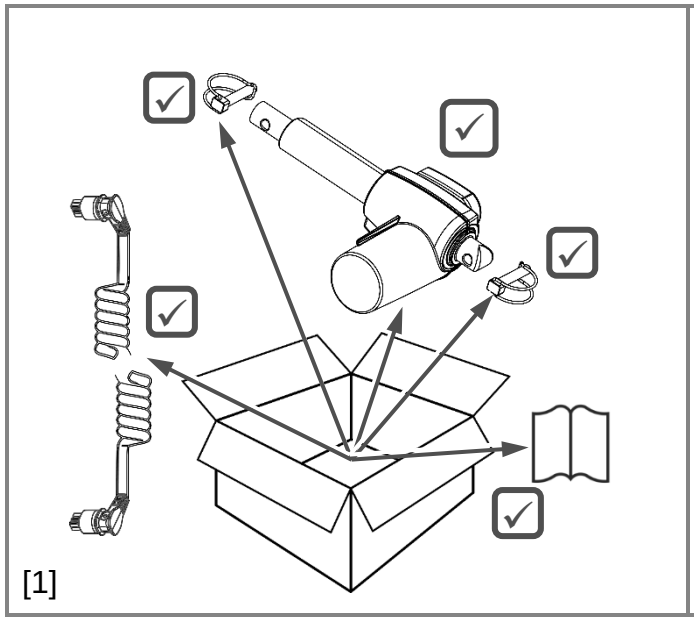
[1]

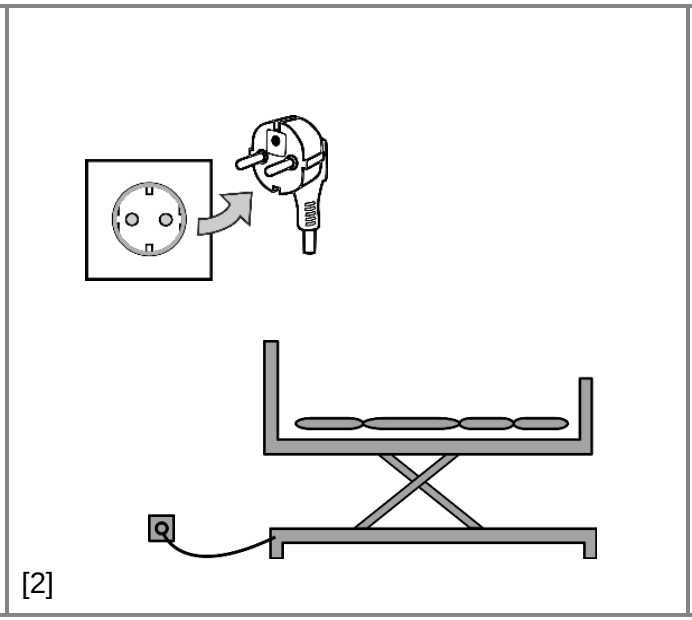
[2]

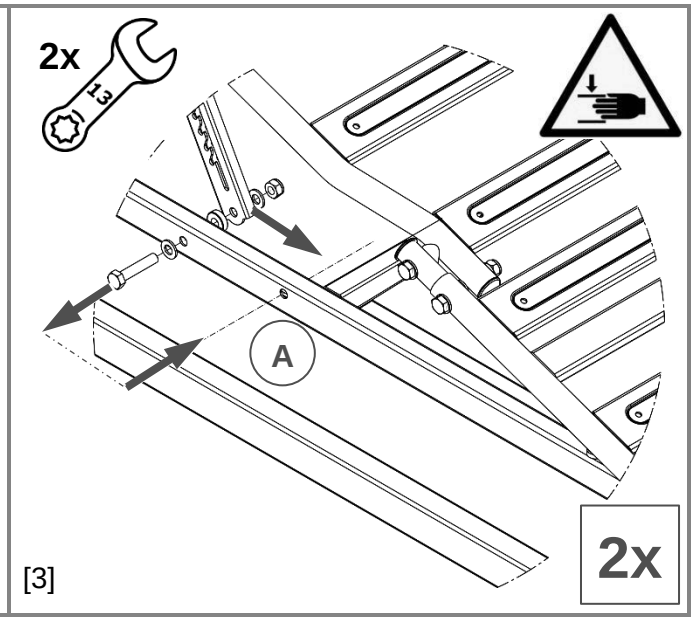
2x
13
A
2x
[3]

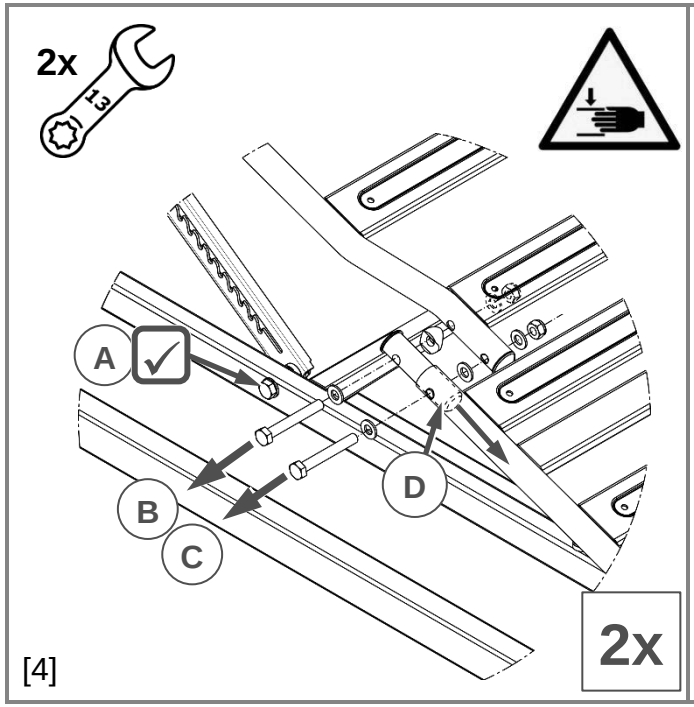
2x
13
A
B
C
D
2x
[4]

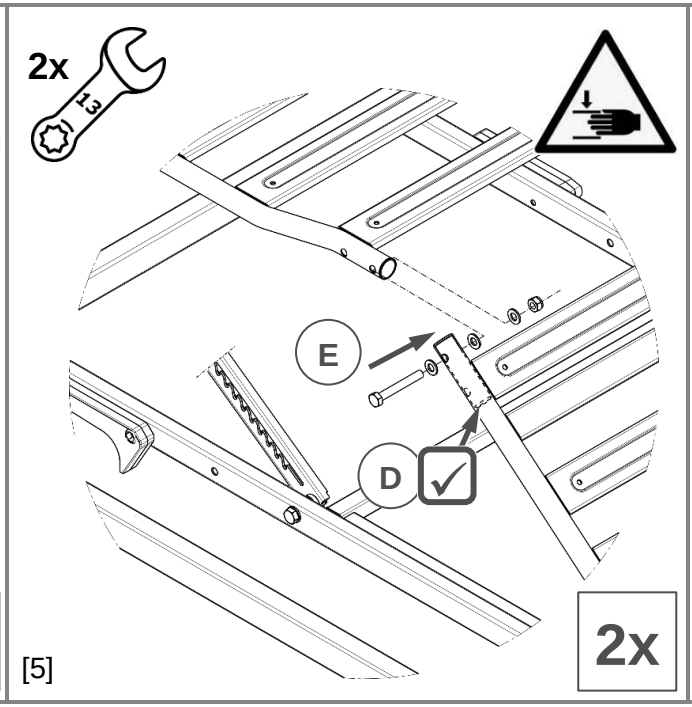
2x
13
E
D
2x
[5]

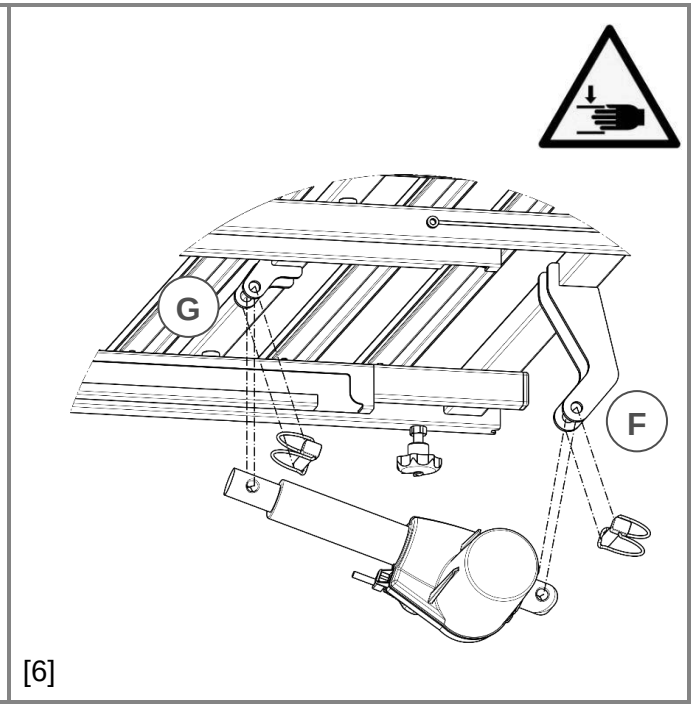
G
F
[6]

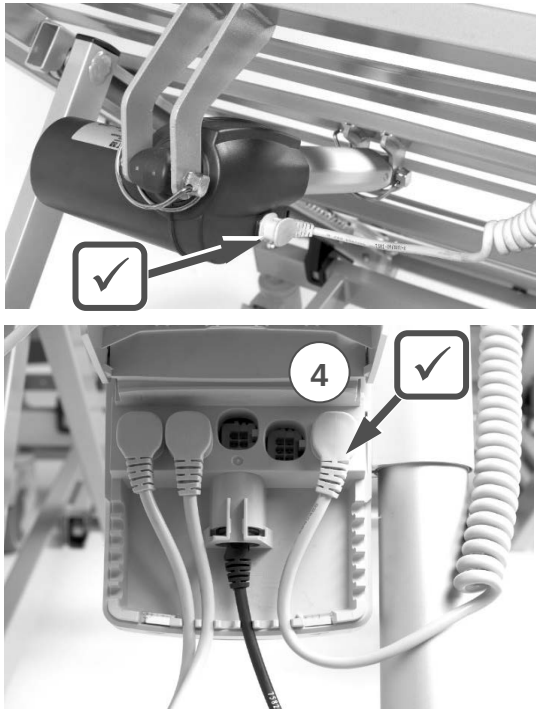

[7]

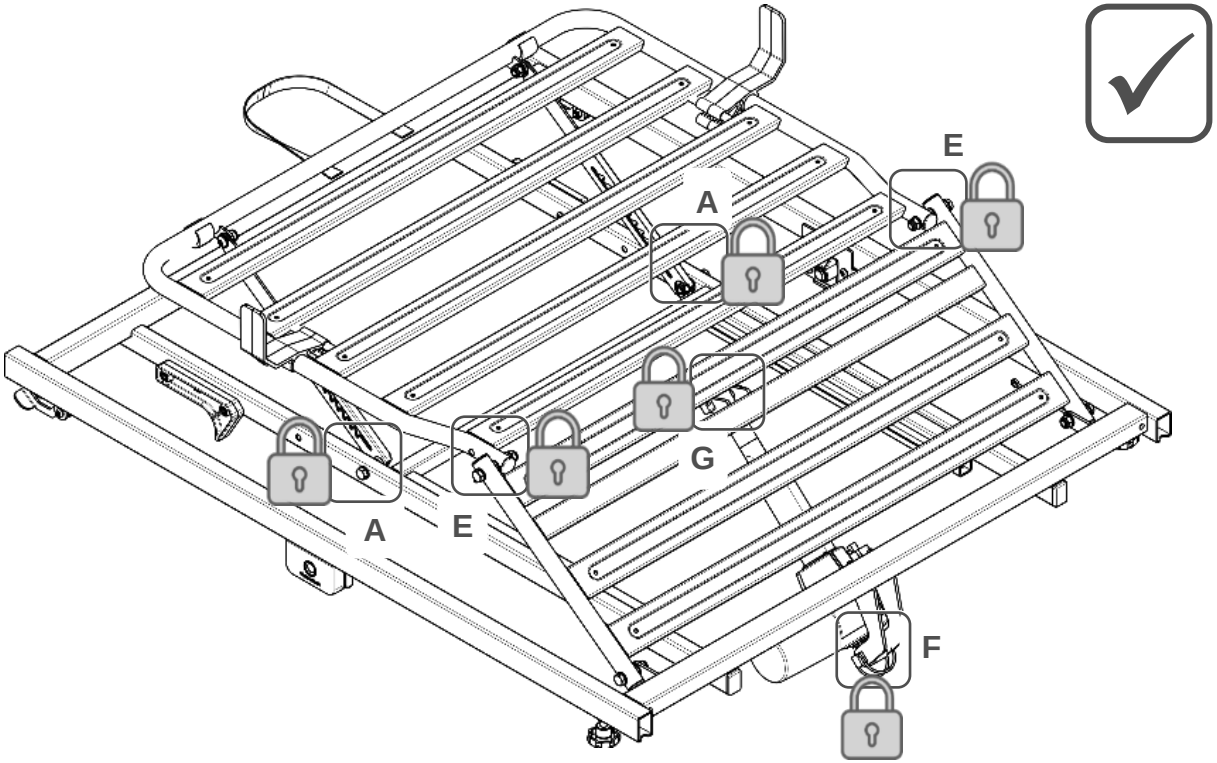

[8]

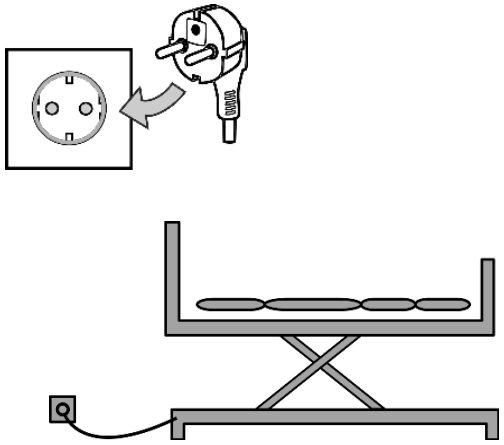

[9]

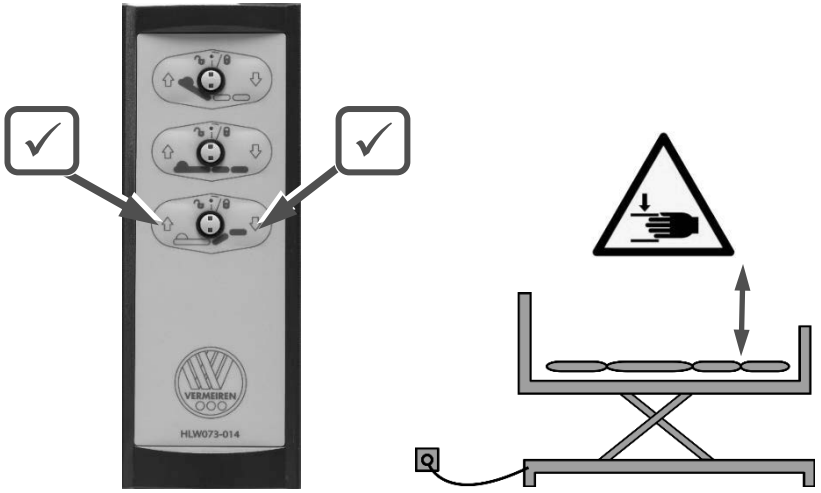

[10]